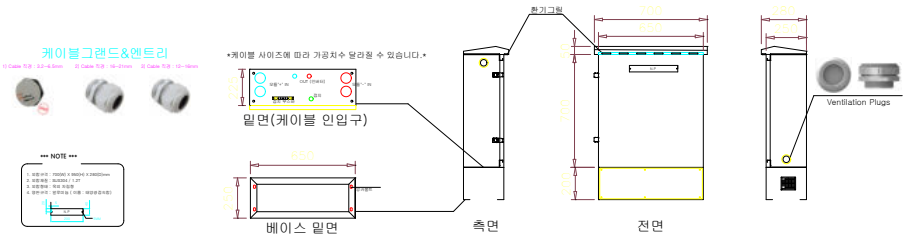

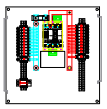

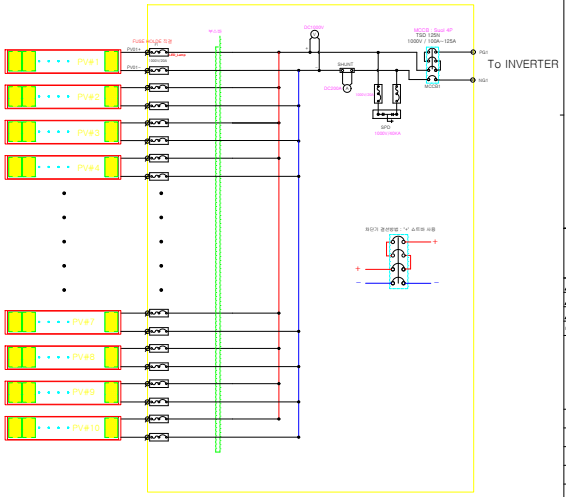

NAME	ITEM	DESCRIPTION	Q'ty	MAKER	REMARK
1	FUSE BASE	1,000V/32A	22	F CHIFE	lamp type
2	FUSE	1,000V/20A	22	F CHIFE	
3	MAIN MCCB	1,000V/125A	1	LS(시)전	가변형
4	SPD	1,000V/40KA	1	SUNTREE	
5	SHUNT	200A/50mV	1	대봉전기	
6	Analog Meter	1,000V&200A	2	대봉전기	
7					
8					
9					
10					
11					
12					
13					
14					
15					
16					

CLIENT

N

INFORMATION

ITEM	-
No. of Modules	
Module Dimension (mm)	-
Module Wattage (W)	
Project Latitude	
Series	-
Parallel	-

* NOTE

PROJECT TITLE

10㎾ 일반형 태양광 접속함

REV.	DATE	DESCRIPTION	BY	BY	APP
	2.01.15	ISSUED FOR CONSTRUCTION			J.Y.J

J root

ACE 805, Hanool Tower,58, Gasan Digital 1-ro, Geumcheon-gu, Seoul, Korea

Homepage : www.jroot.co.kr
E-mail : jyjroot@hotm.com
Tel : 02.2081.5670
Fax : 02.2081.5677

DRAWING TITLE

APPROVAL DATE —	APPROVED
PROJECT NO. —	CHECKED 2
ENGINEER	CHECKED 1
SCALE A1: A3:	DRAWN / DATE
DRAWING NO. 001	REV. 0